Convection Oven - **FC60** Spare Parts

Since October 2009

Rep	Code	Qty	Spare part	Price
1	90124	1	Top cover	77.98
2	90111	1	Ventilation cover	35.66
3	90016D	1	Right wall	55.69
4	A18022	1	Lamp with holder	16.43
5	H03005	1	Door seal	23.22
6	F01039	2	Shelf Support	38.69
7	B09005	2	Door hinge	11.27
8	A02028	1	Timer	47.05
9	A14078	2	Knob	5.79
10	H01012	1	Inside glass	25.66
11	H01011	1	Outside glass	42.64
12	A15011	1	Handle	71.83
13	F01035	4	Shelf / Grid	42.13
14	A13012	4	Foot	1.77
15	90017	1	Bottom part	25.79
16	A08009	1	Green pilot light	11.45
17	A08003	1	Orange pilot light	11.45
18	A06006	1	Thermostat	38.64
19	B09007	2	Hinge holder	6.88
20	A06034	1	Safety thermostat	14.99
21	90016G	1	Left wall	55.69
22	D02034	1	Heating element	39.30
23		1	Blade	see Motor Assy
24		1	Spacer	see Motor Assy
25	A03057	1	Motor Assy	146.69
26	90018	1	Back wall	30.03
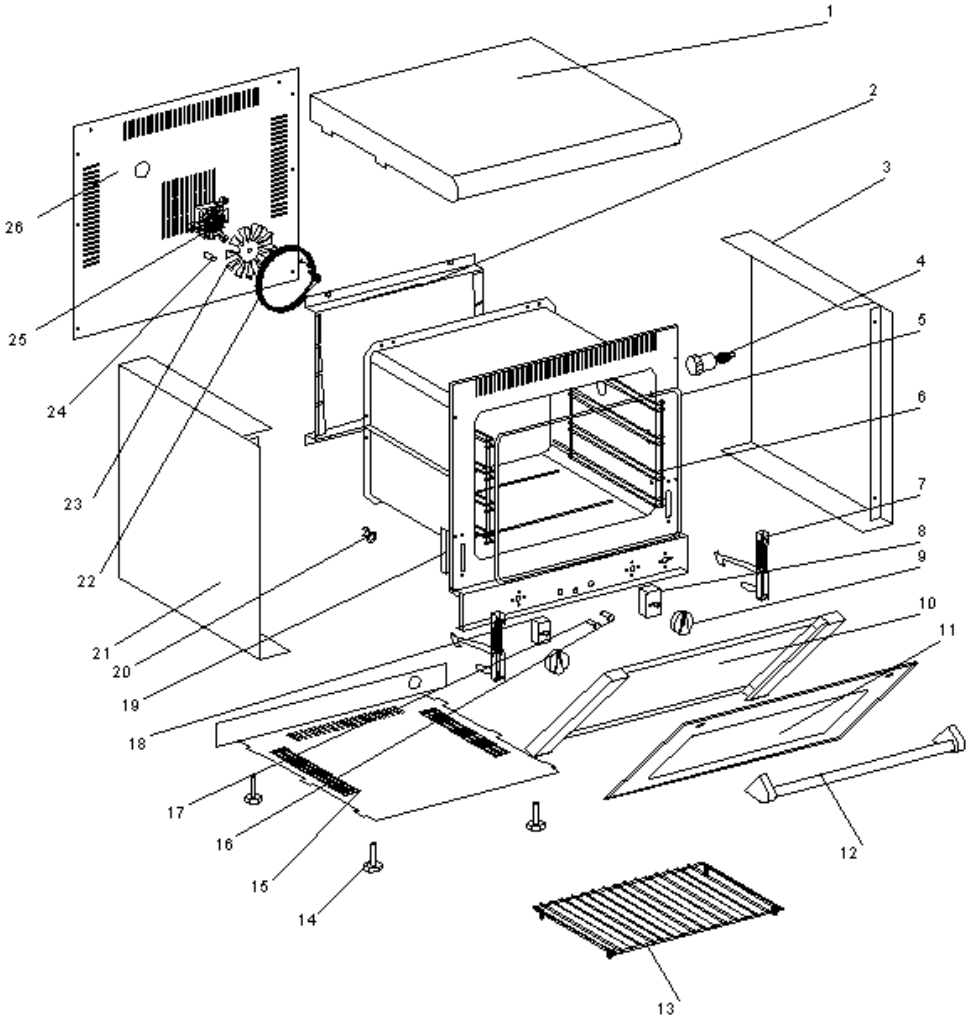
Carriage and Packing charge : £10 per order
Spare parts are non-returnable